Introduction:

PAC-5010 is ARM9-based Linux ready industrial Programmable Automation Controller. The key features are as follow:

1. ARM920T ARM Thumb Processor with 200MIPS at 180MHz, Memory Management Unit
2. 16-KByte Data Cache and 16-KByte Instruction Cache
3. 64MB SDRAM, 16MB Flash on board
4. Two 10/100 Mbps Ethernet
5. Two USB 2.0 full speed (12 Mbps) Host Ports
6. Multimedia Card Interface for SD memory card
7. One RS-485, One RS-232 and One serial console port
8. 16 opto-isolated digital inputs
9. 8 Darlington-pair digital outputs
10. 9 to 40VDC power input
11. Pre-installed Standard Linux 2.6 OS
12. GNU tool chain available in Artila CD
13. DIN RAIL mounting

Packing List

1. PAC-5010
2. CBL-F10M9-20: 10-pin header to DB9 male cable for RS-232 x1
3. Artila CD

PAC-5010 Layout

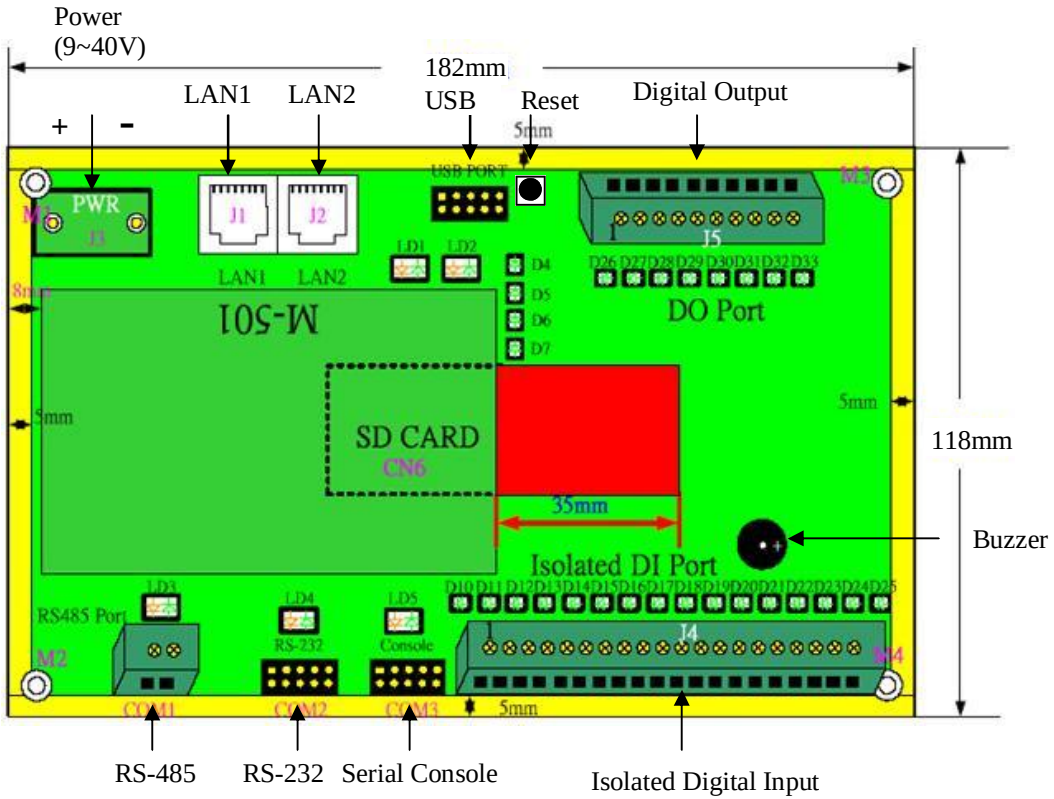

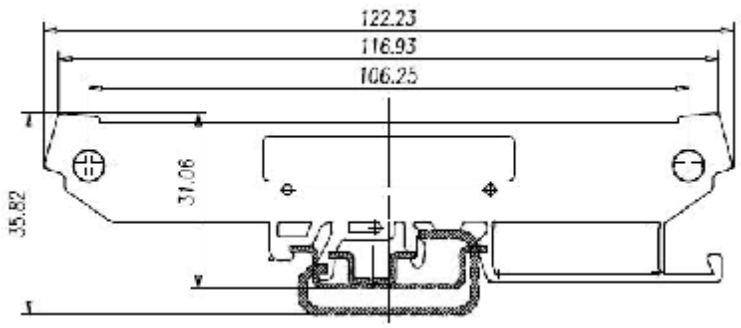

Pin Assignment and Definition

Reset Button
Press the "Reset" button to activate the hardware reset. You should only use this function if the software does not function properly.

Power LED (D4)
The Power LED will show solid green if power is properly applied

Ready LED (D5)
The Ready LED will show solid green if Matrix 520 complete system boot up. If Ready LED is off during system boot up, please check if power input is correct. Turn off the power and restart Matrix 520 again. If Ready LED is still off, please contact the manufacture for technical support.

LAN1/LAN2 LED (D6/D7)
When Ethernet port are connected to the network, Link/Act will show solid green and if there is traffic in the Ethernet, this LED will flash

Serial Port LED (LD3/LD4/LD5)
These three dual color LEDs indicate the data traffic at the serial ports. When RXD line is high then RED light is ON and when TXD line is high, GREEN light is ON.

User LED (LD1/LD2)
LD1 and LD2 are dual color LED for user application. Please refer to example program for the usage.

Ethernet Port (LAN1/LAN2)

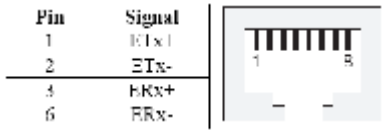

Pin	Signal
1	ETx+
2	ETx-
3	ERx+
6	ERx-

Serial Ports:
COM1: RS-485 (Data+, Data-)
COM2: RS-232 with full modem control
COM3: RS-232 with RxD TxD (Console)

COM1: RS-485

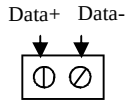

Data+ is pull up to 3.3VDC with 10K Ohm resistor
Data– is pull low to ground
Termination resistor is not included. User can add a 120 Ohm resistor shunt with D+ to D– if necessary

COM2: RS232
COM3: Console

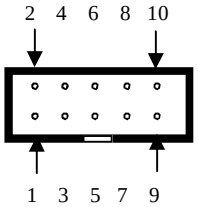

Pin	COM2	COM3
1	DCD	N/C
2	DSR	N/C
3	RXD	RXD
4	RTS	N/C
5	TXD	TXD
6	CTS	N/C
7	DTR	N/C
8	N/C	N/C
9	GND	GND
10	N/C	N/C

Serial console port (COM3) is very helpful to perform system configuration and debug. When you forgot password or network IP address, serial console provide an easy way to access PAC-5010. To access serial console port, you can use CBL-F10M9-20 to convert 10-pin header to RS-232 DB9 male connector and use a null modem adaptor for PC RS-232 interface. Use any terminal software such as hyper terminal and setting as follow:
Baud Rate: 115200
Data bits: 8
Parity: N
Stop bit: 1
Terminal type: ANSI
Once you power up PAC-5010, you will see the console message appears.

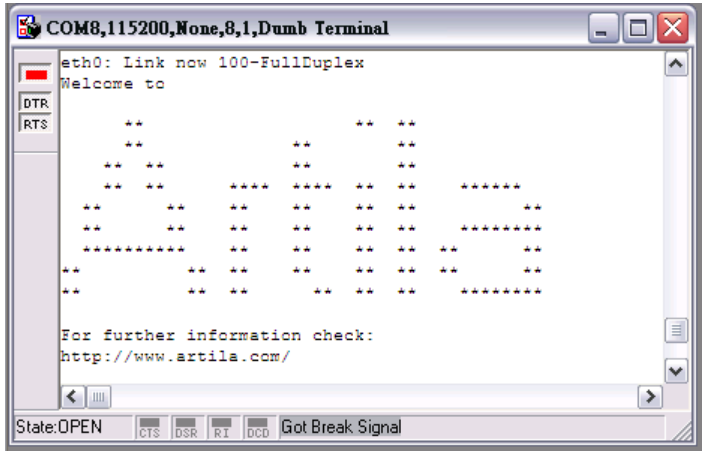

RS-232 DB9 Male Connector

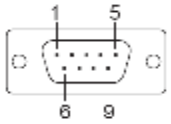

Pin	RS-232
1	DCD
2	RXD
3	TXD
4	DTR
5	GND
6	DSR
7	RTS
8	CTS
9	N/C

USB Port:

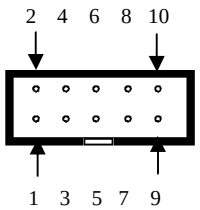

Vcc1,Vcc2: +5Vdc
GND: Ground

Pin	USB
1	Vcc1
2	Vcc2
3	Data1-
4	Data2-
5	Data1+
6	Data2+
7	GND
8	GND
9	N/C
10	N/C

Power Input Connector (J3)

PAC-5010 uses +9VDC to 40VDC power and input from J3 connector. Auto-polarity and surge protection are included in power input circuitry of PAC-5010 to provide power protection to PAC-5010.

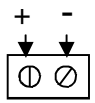

Digital Output Connector (J5)

The digital output are equipped with 8 darlington pair transistors (Allegro UDN2981A) to switch the external relay or solenoid. The internal transient-suppression diodes permit the drive to be used with inductive load. The source voltage of the drive is from 5Vdc to 50 Vdc and the maximum driving current is 500 mA.

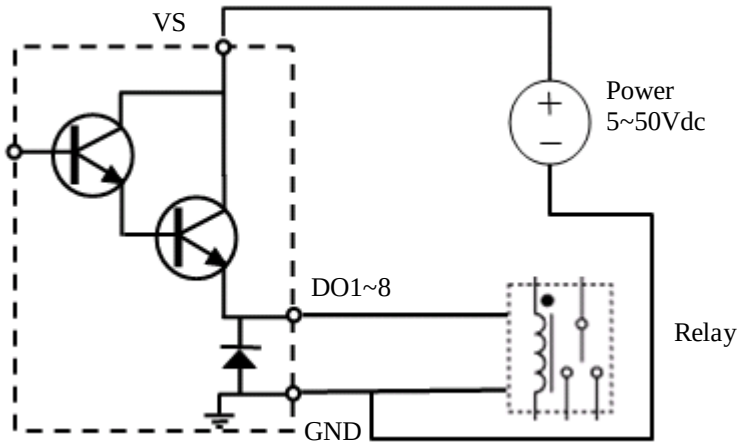

Digital Input Connector (J4)

The 16 channel isolated input are equipped with 2500 Vrms photo coupler isolator. Four of the channels form a group and share the same common ground. The specification of the isolated input channels are:

Logical High: 5~24Vdc
Logical Low: 0~1.5Vdc
Input resistance: 1.2KOhms @0.5W
Response time: 20us
Isolation: 2500Vrms

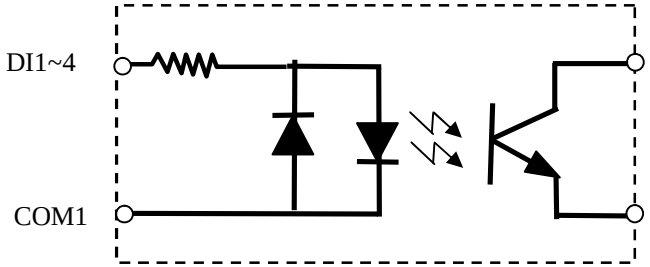

J4				J5	
1	DI1	11	DI9	1	DO1
2	DI2	12	DI10	2	DO2
3	DI3	13	DI11	3	DO3
4	DI4	14	DI12	4	DO4
5	COM1	15	COM3	5	DO5
6	DI5	16	DI13	6	DO6
7	DI6	17	DI14	7	DO7
8	DI7	18	DI15	8	DO8
9	DI8	19	DI16	9	GND
10	COM2	20	COM4	10	VS

DIx: Isolated digital input channels
COMx: common ground of four DIx
DOx: Voltage output channels
GND: Ground
VS: Voltage source input

Factory Default Settings

LAN 1 IP Address: 192.168.2.127
LAN 2 IP Address: DHCP
Login: guest
Password: guest
Supervisor: root (ssh only)
Password: root

Login

After power on, wait about 30 seconds for system boot up. Using Telnet and guest or ssh and root to login in PAC-5010.

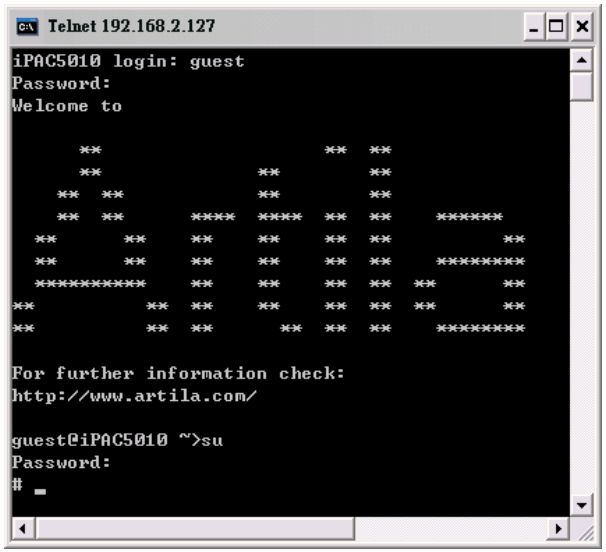

Network Settings

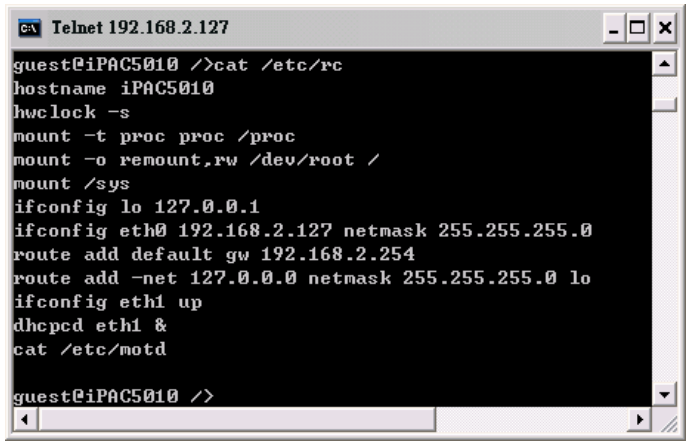

To configure the IP address, Netmask and Gateway setting, please modify /disk/etc/rc as following:
ifconfig eth0 192.168.2.127 netmask 255.255.255.0
For DHCP setting:
dhcpcd eth1 &

Wireless LAN Configuration

PAC-5010 supports wireless LAN by using USB WLAN adaptor which uses Ralink RT2571 (rt73) controller. Please refer to the website http://ralink.rapla.net for the supporting list of the USB WLAN adaptor.
To configure the wireless LAN setting, please use command:
ifconfig wlan0 up
iwconfig wlan0 essid XXXX key YYYYYYYY mode MMMM
For infrastructure mode XXXX is the access point name and YYYYYYYY is the encryption key and MMMM should be *managed*
For Ad-Hoc mode mode XXXX is the iPAC5010 device name and YYYYYYYY is the encryption key MMMM should be *ad-hoc*.
To configure the IP address use command
dhcpcd wlan0 & or *ifconfig wlan0 192.168.2.127 netmask 255.255.255.0*

File System

PAC-5010 configures the root file system as RAMDISK and the user disk (/disk) which includes /home and /etc directory are configured as Flash Disk. To find out the file system information, please use command /mount as show as above. In addition, use command /df to find out the disk space of the disk. The RAMDISK uses 8MB memory space to store the root file system and the user disk is about 11MB for user's program storage. Therefore, user's program and utility software must be saved in the user disk space (/disk). Files saved to other directory will be loss after power off !!!

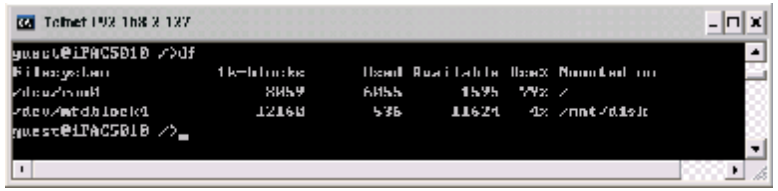

Devices list

The supported devices are shown at /dev directory. Following list are most popular ones:

1. ttyS0: port 3 serial console port
2. ttyS1 :port 1 RS-485
3. ttyS2: port 2 RS-232
4. mmc to mmc2: SD memory card
5. sda to sde: USB flash disk
6. ttyUSB0 to ttyUSB1: USB RS-232 adaptor (fdti_sio.ko)
7. rtc: Real Time Clock
8. gpio: digital I/O
9. ttyACM0 and ttyACM1: USB Modem (CDC compliant)

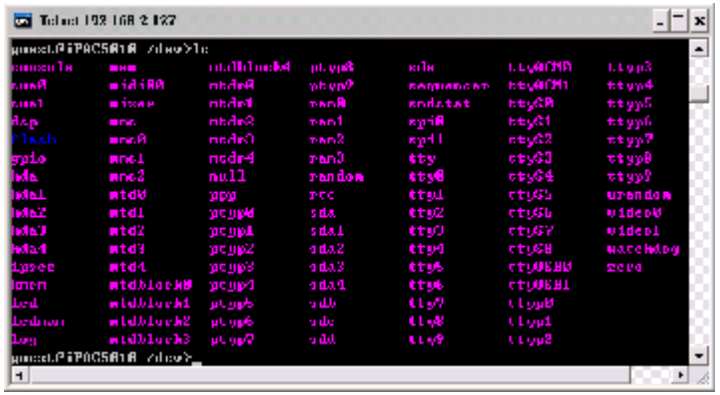

Utility Software:

PAC-5010 includes busybox utility collection and Artila utility software as follow:

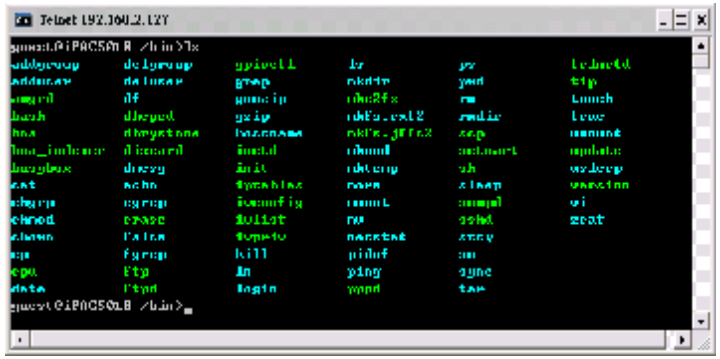

Artila Utility Software:

The introduction of Artila utility software as follow:

1. *update* : update loader, kernel or root file system image. Also use *update —FORMAT* to format user disk. Type *update—help* to find the command usage

```
Telnet 192.168.2.127
# update --help
Usage: update [OPTION] filename
Write image to flash.

  -q, --quiet    don't display progress messages
      --silent   same as --quiet
      --help     display this help and exit
      --version  output version information and exit
      --FORMAT   format userdisk
# _
```

Update can only operated under supervisor mode (password : root)

2. *setuart:* configure serial port setting. An example show as followed to configure port 1 as RS-485 interface with baud rate 921600. Please note only port 1 support 9-bit data at RS-485

```
Telnet 192.168.2.127
Usage: setuart [OPTION]

 -h, --help                display this help and exit
 -v, --version             output version information and exit
 -p, --port[1,2,...]       UART port number
 -t, --type[232,422,485]   UART interface type
 -m, --mode[0,1]           Dis/Enable 9-bit data mode for RS485
 -b, --baud[0,...,921600]  Set baudrate, up to 921600bps
guest@Matrix520 /bin>setuart -p1 -t485 -m0 -b921600
Port 1 ==> type:485, mode:0
guest@Matrix520 /bin>
```

3. *gpioctl*: gpioctl can use to control the digital input and output of PAC-5010. Use

>gpioctl --help

To find out the usage of this command.

```
Telnet 192.168.2.127
guest@iPAC5010 /bin>gpioctl -a
GPIO count:24
DIP_SW count:0
GPIO0 -> State:Low, Mode:Output
GPIO1 -> State:Low, Mode:Output
GPIO2 -> State:Low, Mode:Output
GPIO3 -> State:Low, Mode:Output
GPIO4 -> State:Low, Mode:Output
GPIO5 -> State:Low, Mode:Output
GPIO6 -> State:Low, Mode:Output
GPIO7 -> State:Low, Mode:Output
GPIO8 -> State:Low, Mode:Input
GPIO9 -> State:Low, Mode:Input
GPIO10 -> State:Low, Mode:Input
GPIO11 -> State:Low, Mode:Input
GPIO12 -> State:Low, Mode:Input
GPIO13 -> State:Low, Mode:Input
GPIO14 -> State:Low, Mode:Input
GPIO15 -> State:Low, Mode:Input
GPIO16 -> State:Low, Mode:Input
GPIO17 -> State:Low, Mode:Input
GPIO18 -> State:Low, Mode:Input
GPIO19 -> State:Low, Mode:Input
GPIO20 -> State:Low, Mode:Input
GPIO21 -> State:Low, Mode:Input
GPIO22 -> State:Low, Mode:Input
GPIO23 -> State:Low, Mode:Input
guest@iPAC5010 /bin>
```

GPIO0~GPIO7 map to digital output DO1~DO8
GPIO8~GPIO23 map to digital input DI1 ~DI16

How to make more utility software

You might also find utility software available on Artila CD under /Matrix 5XX/utility such as *ntpclient, ssh, scp, bluez* and *ssh -keygen*. If you want, you can ftp or copy the utility software to PAC-5010 user disk (/disk). Also you can use find the source code and use the GNU Tool Chain to make the utility by yourself.

Restore to default setting

The factory default setting is available at */default* directory Copy files in this folder to */disk* will restore PAC-5010 to factory default setting.

Mounting External Storage Memory

To find out the device name of the external memory device which plug into Matrix 520, you can use the command

/dmesg | grep sd

or

/dmesg | grep mmc

Type

mount /dev/sda1 to mount the USB disk and

mount /dev/mmc0 to mount SD card

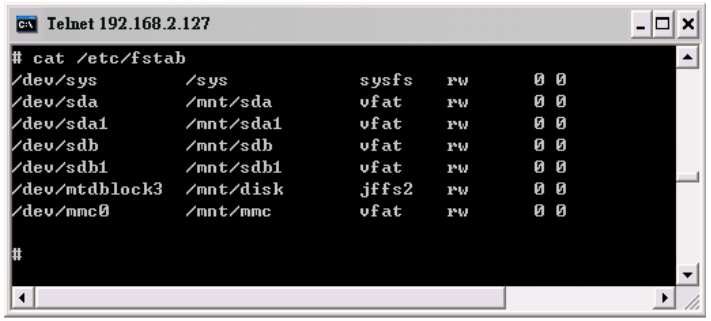

Welcome Message

To modify the welcome message, user can use text edit to modify the /etc/motd.

Web Page Directory

The web pages are placed at /home/httpd and the boa.conf contains the boa web server settings. The home page name should be *index.html*

Adjust the system time

To adjust the RTC time, you can follow the command

/date MMDDhhmmYYYY

where

MM=Month (01~12)

DD=Date (01~31)

hh=Hour

mm=minutes

YYYY= Year

/hwclock –w

To write the date information to RTC

User can also use NTP client utility in Artila CD to adjust the RTC time.

/ntpclient [time server ip]

SSH Console

PAC-5010 support SSH. If you use Linux computer, you can use SSH command to login PAC-5010. The configuration of SSH and key are located at

/etc/config/ssh

The key generation program is available at Artila CD

/matrix 5XX/utility/ssh_keygen

User can copy this program to PAC-5010 to generate the key

Manager Utility Software

The Manager Utility software, **manager.jar** is a java program and is used to discovered the PAC-5010 in the network if the IP address is forgotten. It can be run at any OS where java run time is available. To install the java run time platform at your computer, please visit **http://java.sun.com** and download the Java 2 Standard Edition (J2SE). Once the PAC -5010 is found, you can click the Telnet Console to configure the PAC-5010

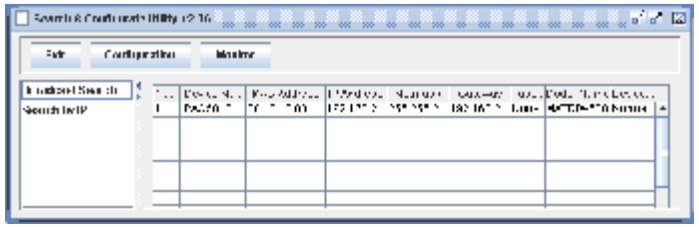

Install GNU Tool Chain

Find a PC with Linux 2.6.X Kernel installed and login as a **root** user then copy the arm-linux-3.3.2.tar.gz to root directory of PC. Under root directory, type following command to install the *Gnu Tool Chain*

#tar zxvf arm-linux-3.3.2.tar.gz

Getting started with the Hello program

There are many example programs in Artila CD. To compile the sample you can use the Make file to and type

make

To compile and link the library. Once done, use ftp command

ftp 192.168.2.127

And bin command to set transfer mode to binary

ftp>bin

to transfer the execution file to Matrix 520 user disk (/disk) and use

chmod +x file.o

Change it to execution mode and

./file.o

to run the file